Central Brass
COMPANY

Phone: 800.338.9468

MODEL# 0210, 0210-Q

Commerce, CA 90040
Fax: 323.888.9515
Email: sales@centralbrass.com
www.centralbrass.com

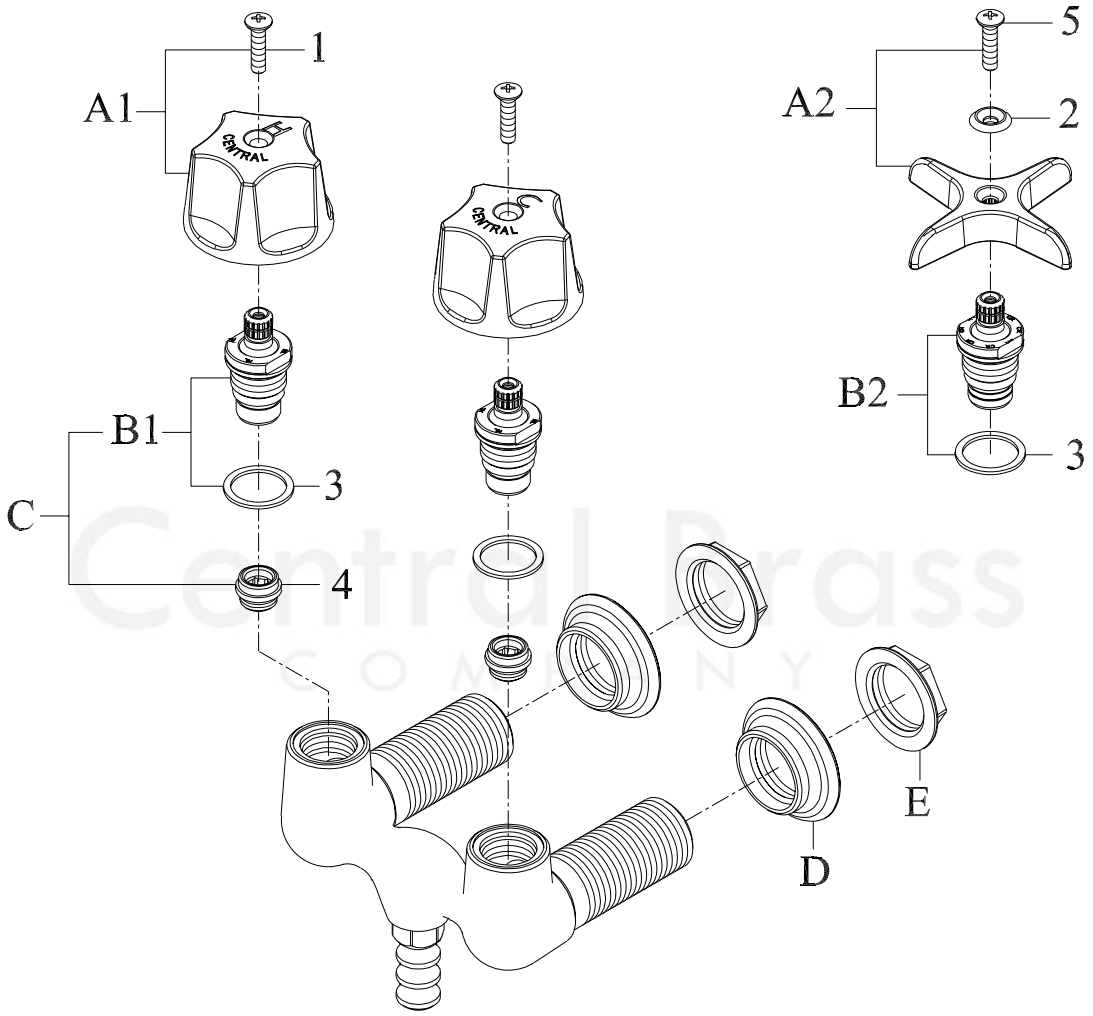

	ITEM#	DESCRIPTION		ITEM#	DESCRIPTION
A1	G-398-C, H	Round Fluted Handle With Screw	E	G-97	Locknut (4090-3/4) (2 Pcs Per Pack)
A2	G-1045-SC, SH [For "-Q" Suffix]	Cross Handle-Hot,Cold	1	X107-H	Handle Screw (6 Pcs Per Pack)
B1	G-454-ER	Stem Assembly	2	X107-FB, FR	Index Blue, Red (5 pcs/pk)
B2	G-454-ERRC [For "-Q" Suffix]	Stem Assembly, Rough Chrome	3	X1028-Y	Gasket (25 Pcs Per Pack)
C	K-454-H	Stem Assembly W/Replaceable Seat	4	X263-BC	Replacement Seat (10 Pcs Per Pack)
D	X2133-210	Flange (2 Pcs Per Pack)	5	X107-F	Handle Screw (25 pcs/pk)

 Central Brass Company© 2021

PARTS BREAKDOWN SHEET